SIMPLY COMPRESSO

INSTALLATION

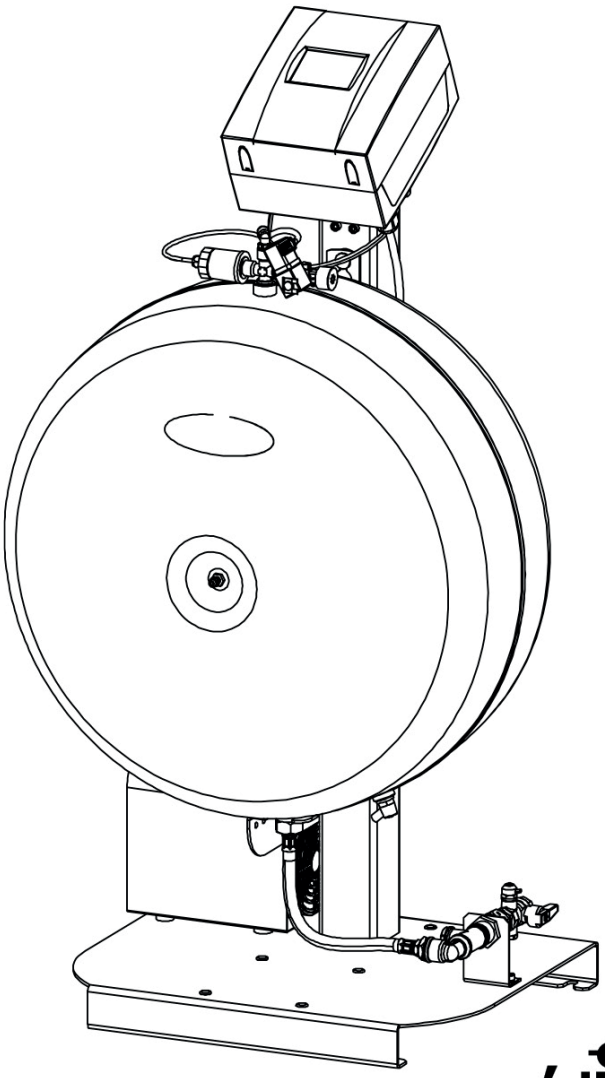

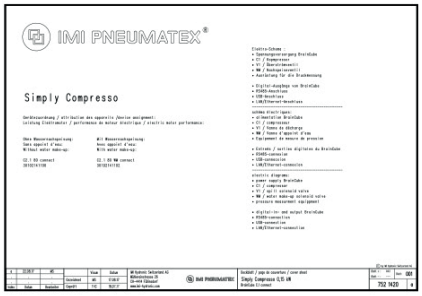

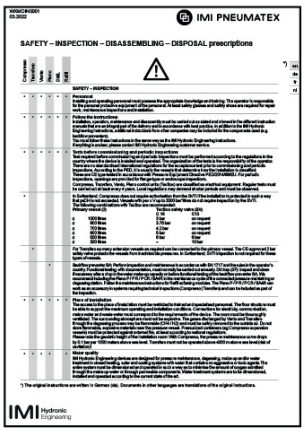

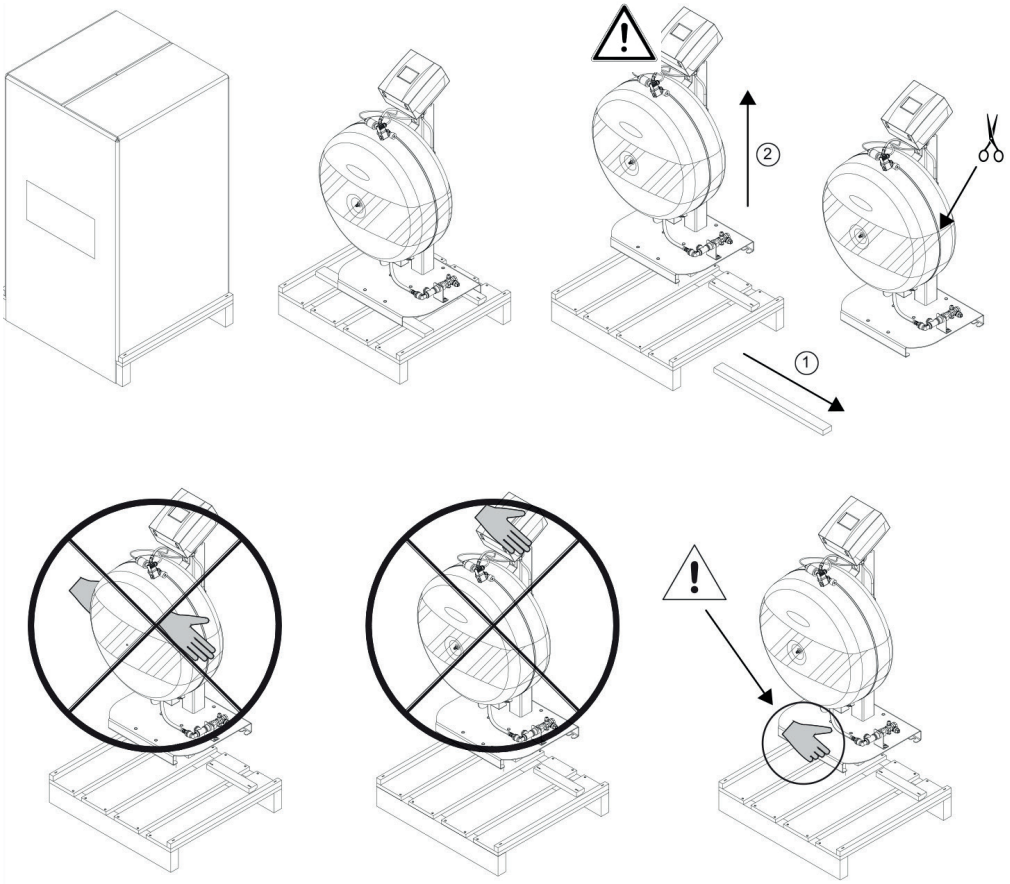
2
1

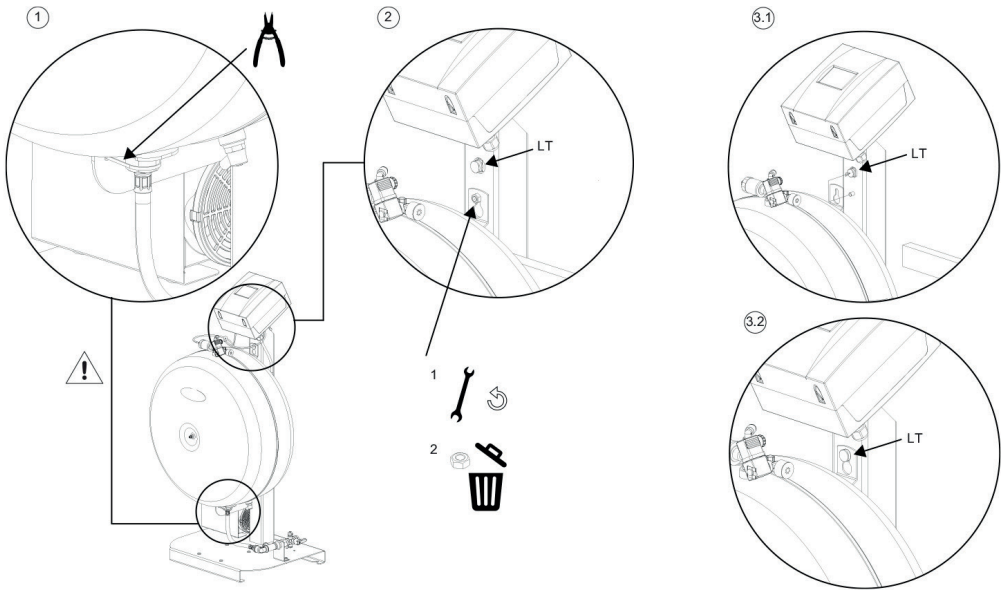
1
2
LT
3.1
LT
1
2
3.2
LT

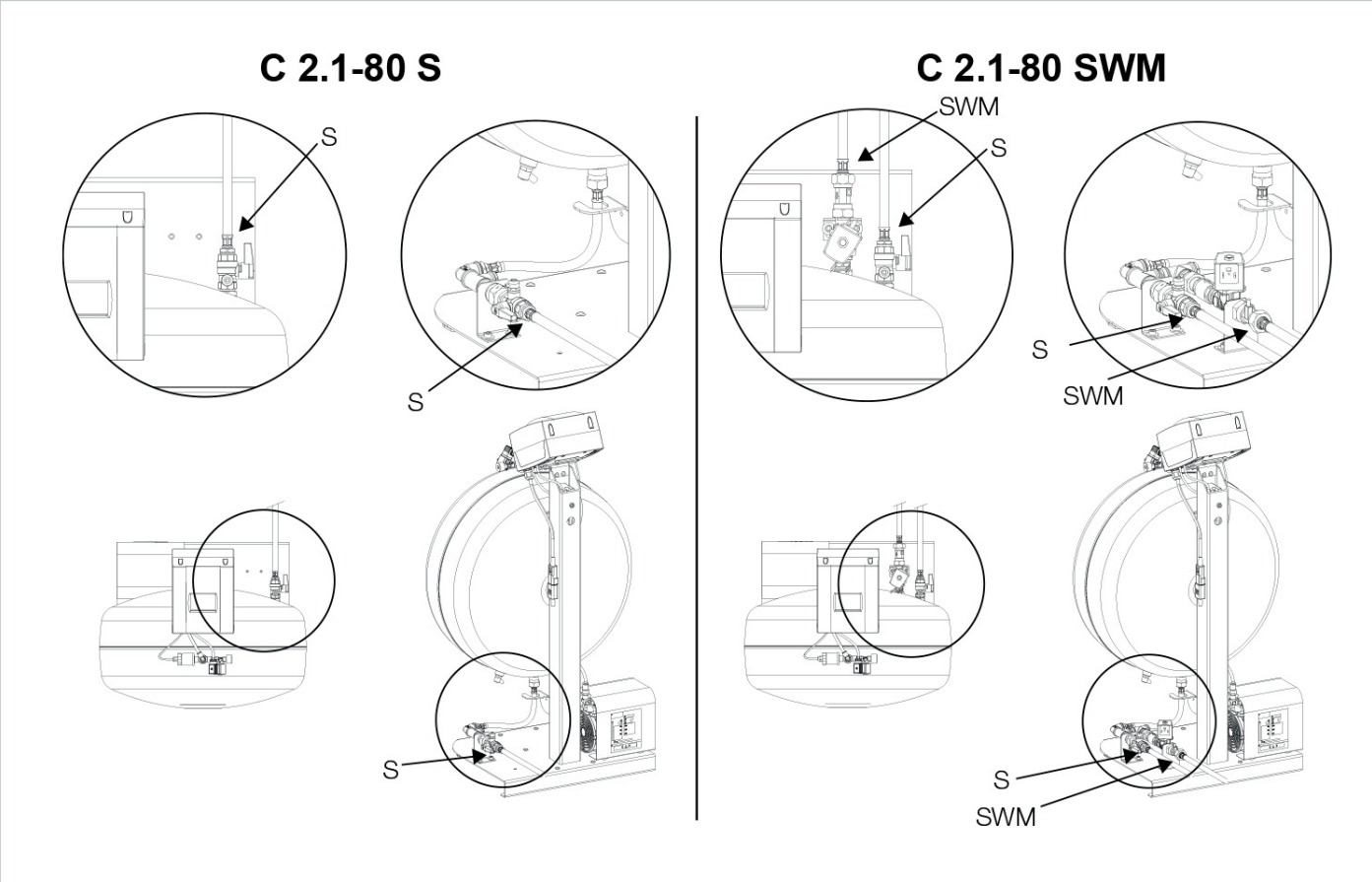
C 2.1-80 S
C 2.1-80 SWM
S
SWM

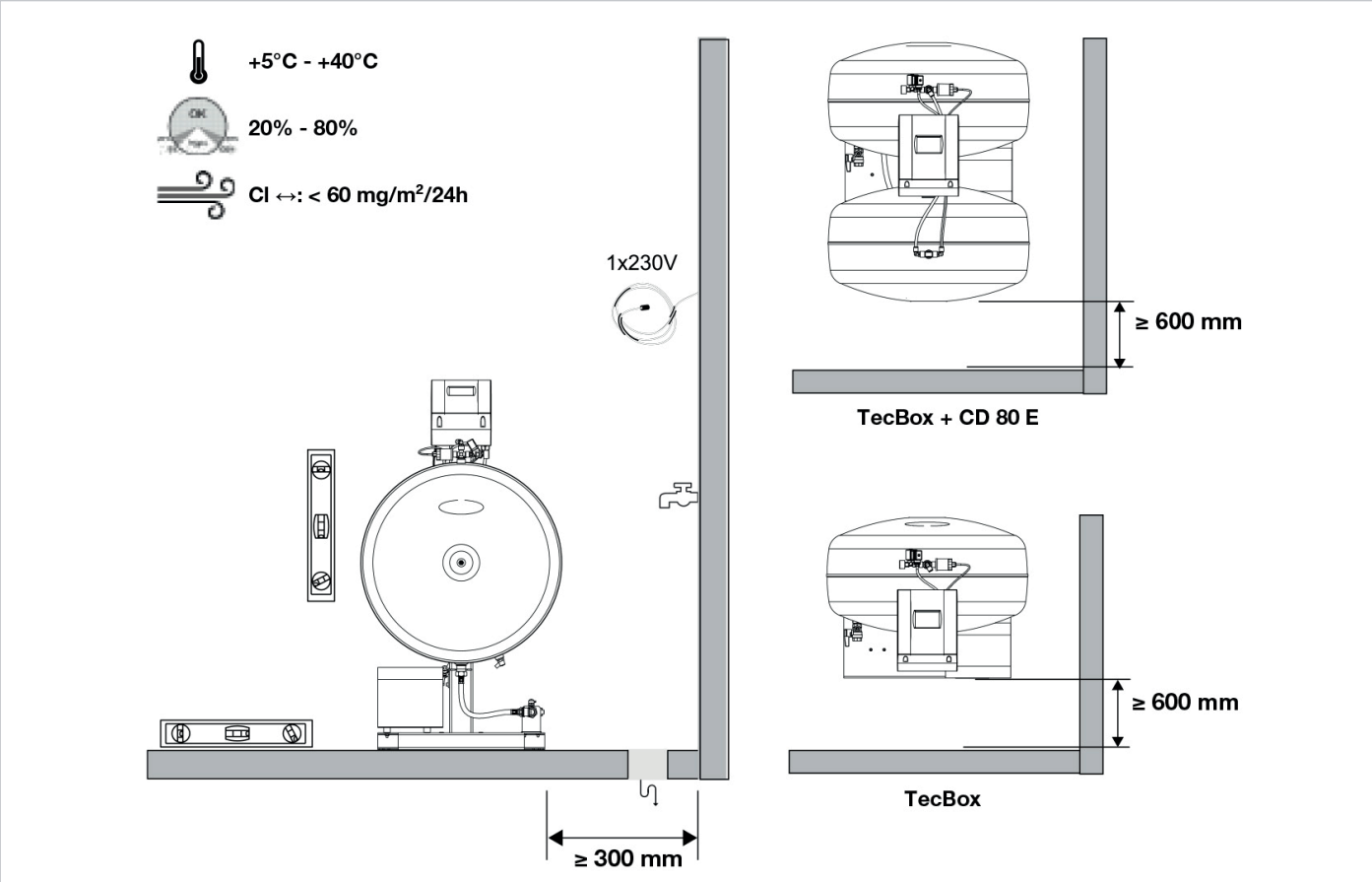
+5°C - +40°C
20% - 80%
Cl ↔: < 60 mg/m²/24h
1x230V
≥ 600 mm
TecBox + CD 80 E
≥ 600 mm
TecBox
≥ 300 mm

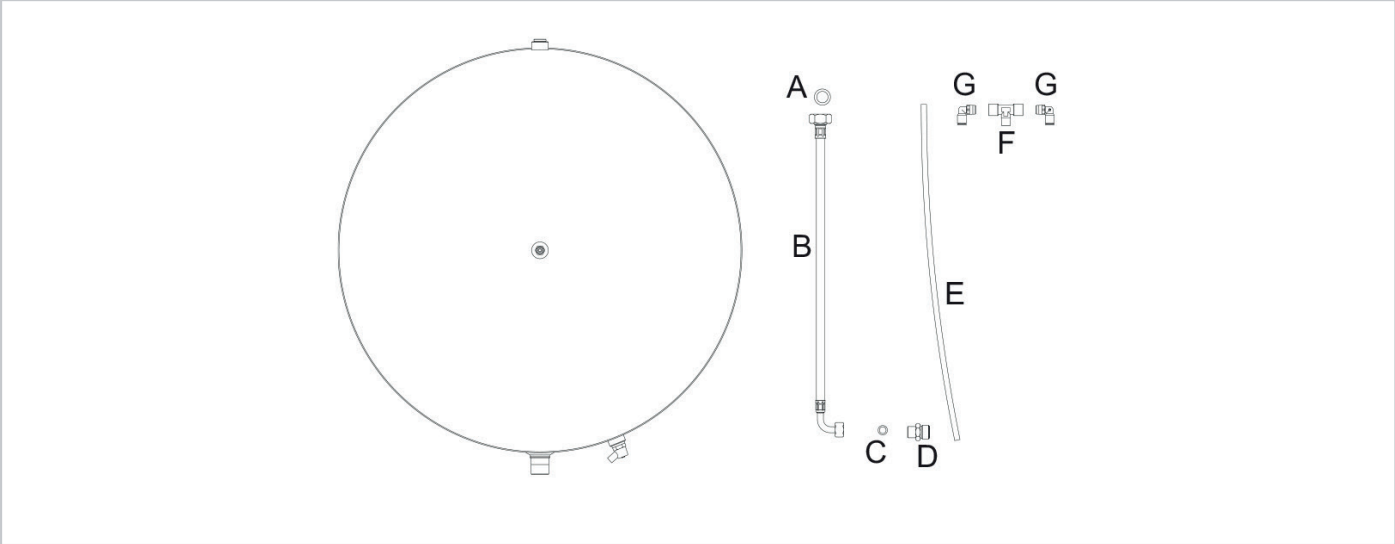
A
G
G
F
B
E
C
D

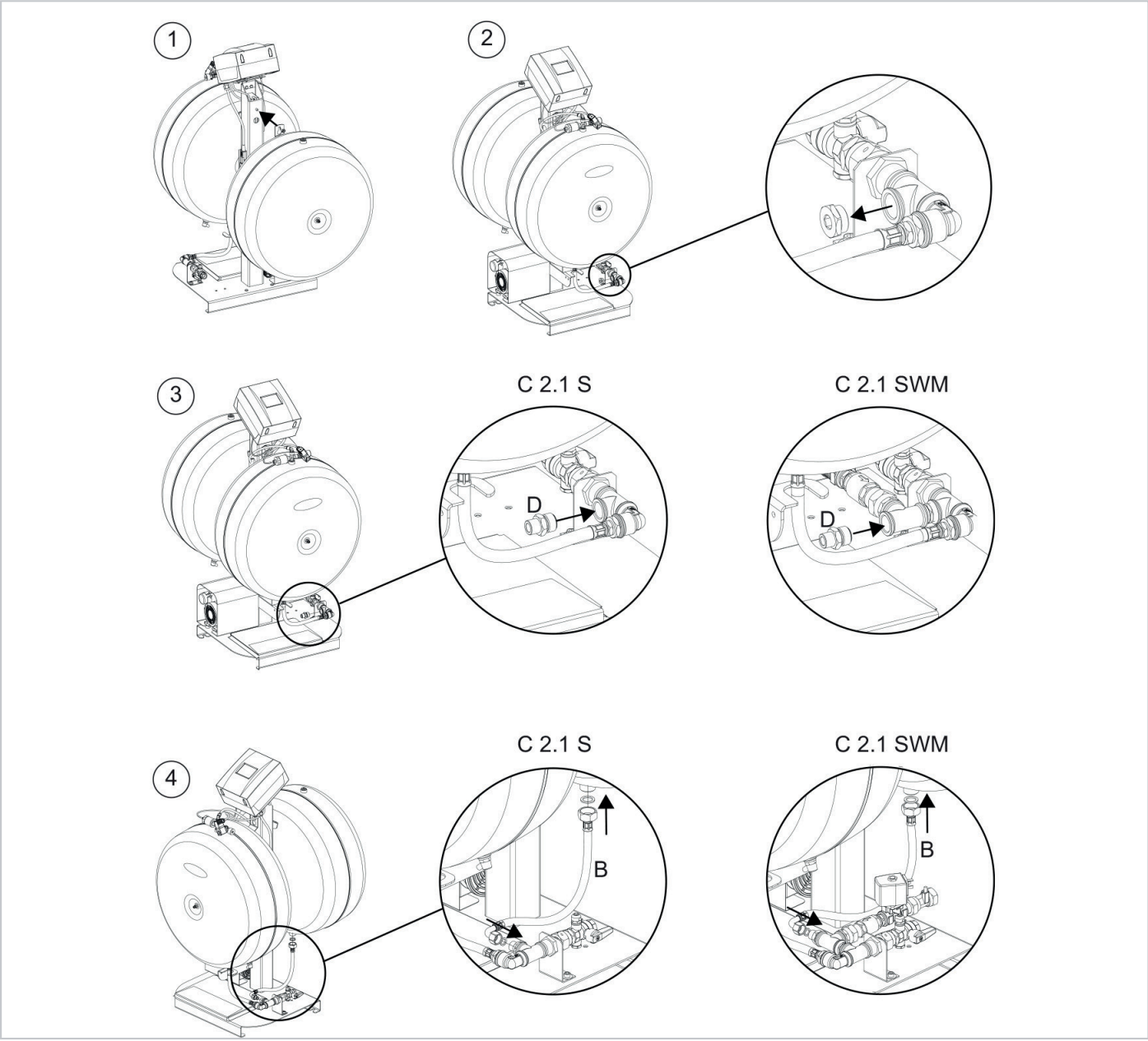
1
2
3
C 2.1 S
C 2.1 SWM
D
D
4
C 2.1 S
C 2.1 SWM
B
B

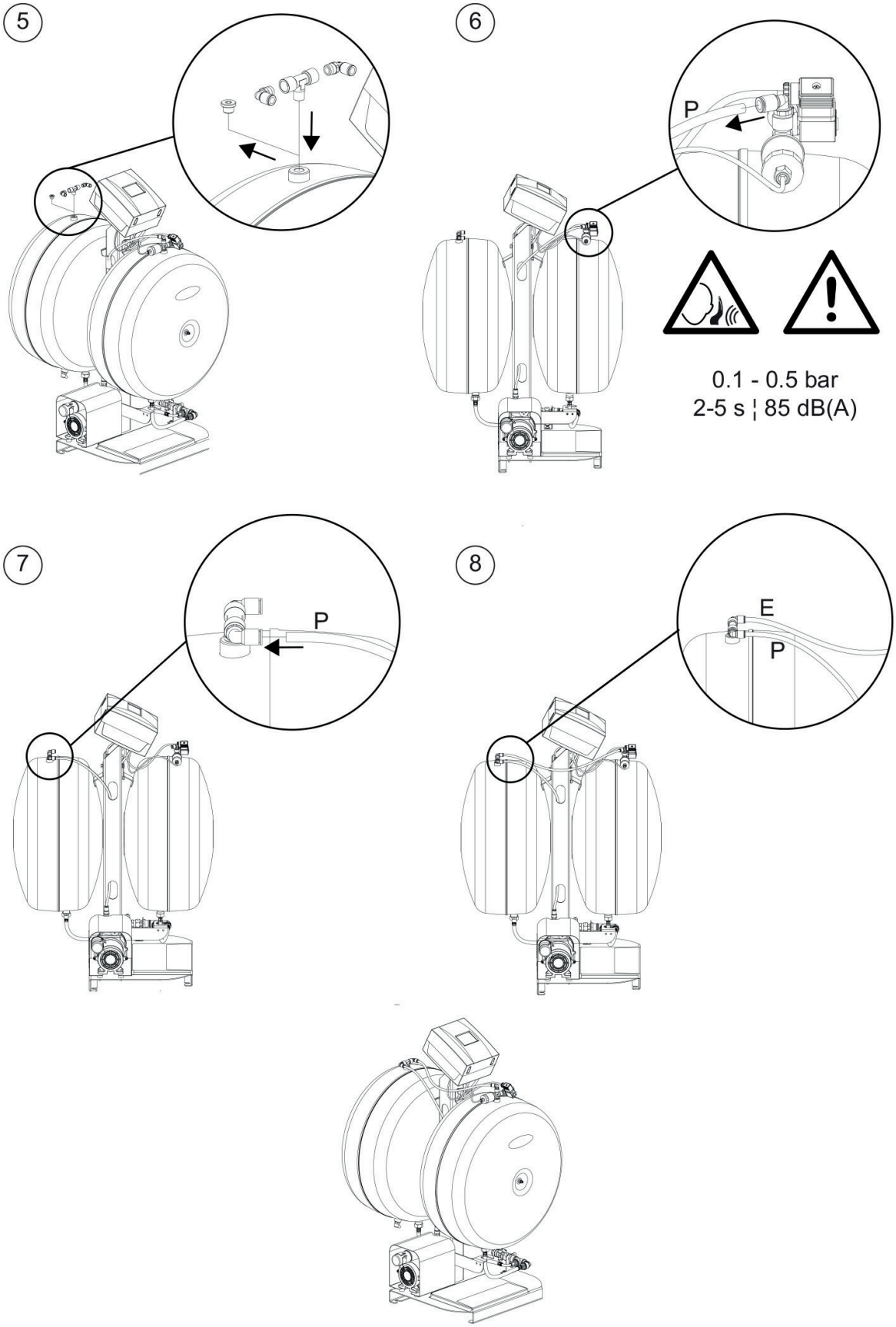
5
6
P
0.1 - 0.5 bar
2-5 s ¦ 85 dB(A)
7
P
8
E
P

Simply Compresso ☐ Optional

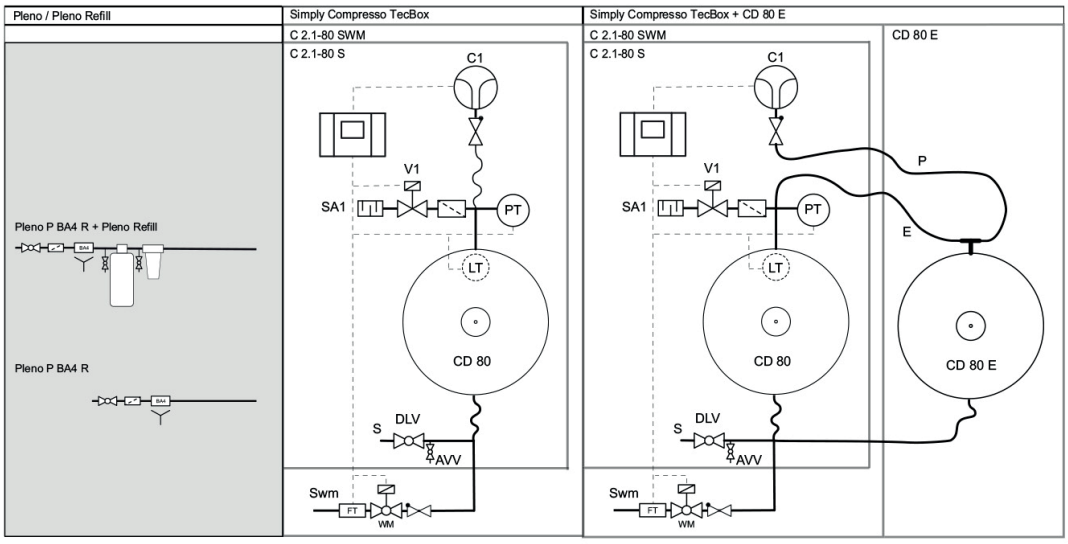

C 2.1-80 S

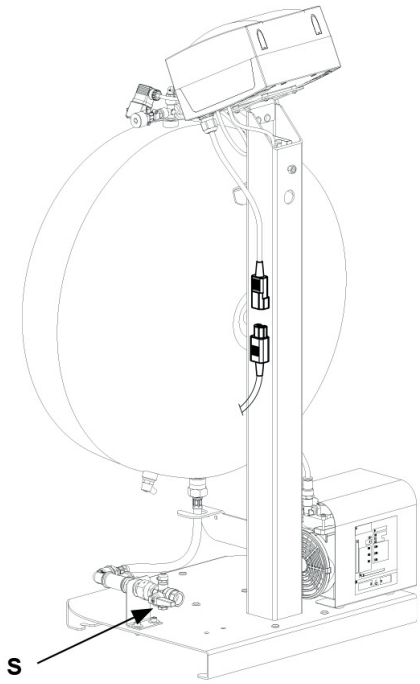

C 2.1-80 SWM

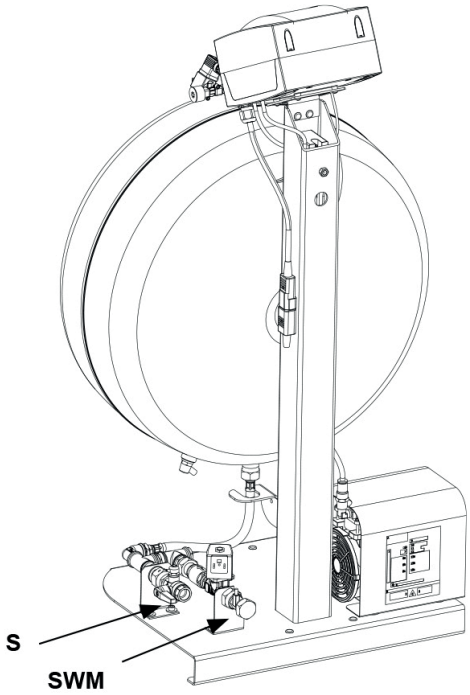

		C 2.1-80 S	C 2.1-80 SWM
pa	bar	0,5	0,5
pa	bar	2,5	2,5

		S	SWM
Ts min	°C	5	5
Ts max	°C	70	65

tr ≤ 70 °C

Simply Compresso

C 2.1-80 S

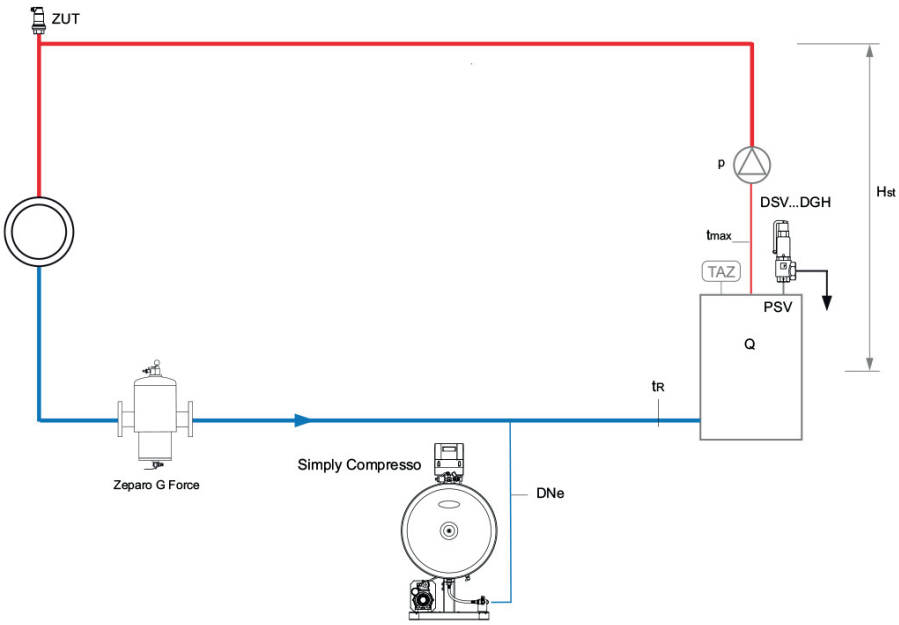

tr ≤ 70 °C

Simply Compresso

C 2.1-80 S

+

Pleno P BA4R

+

Pleno Refill

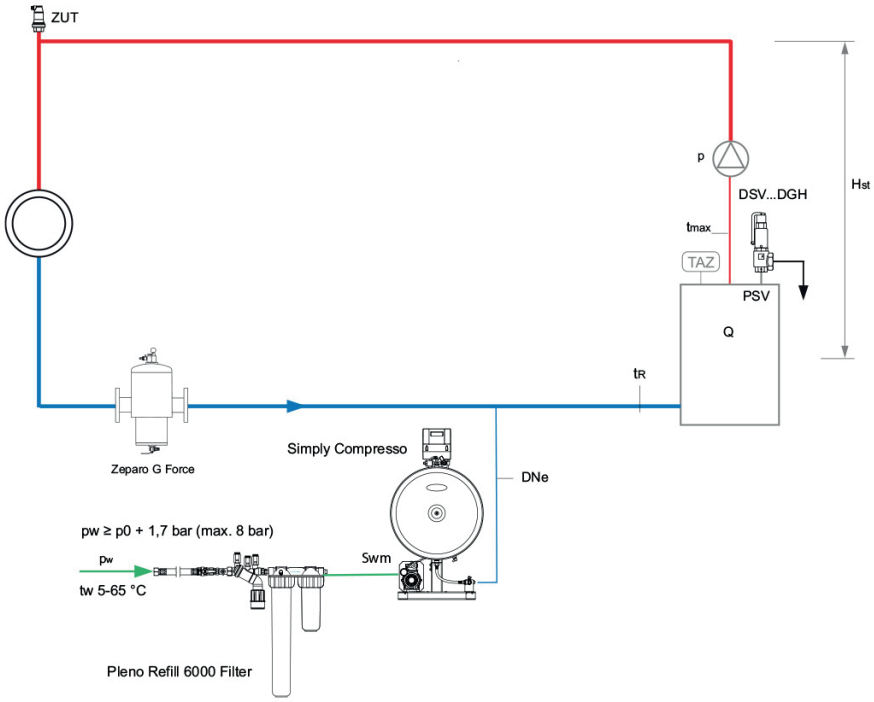

DNe = DN 20 (Lmax = 30 m)

230V/50 Hz
10A / 3 x 1,0 mm²
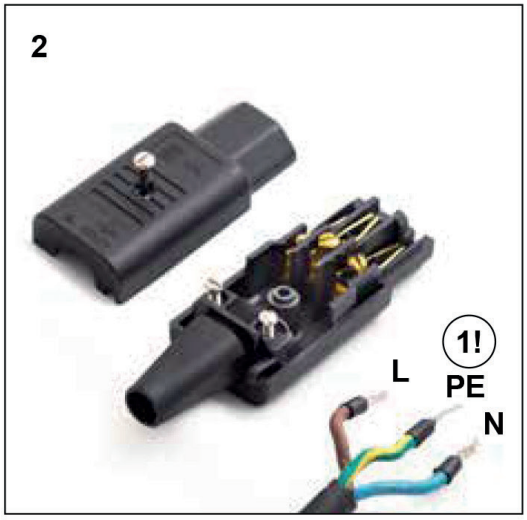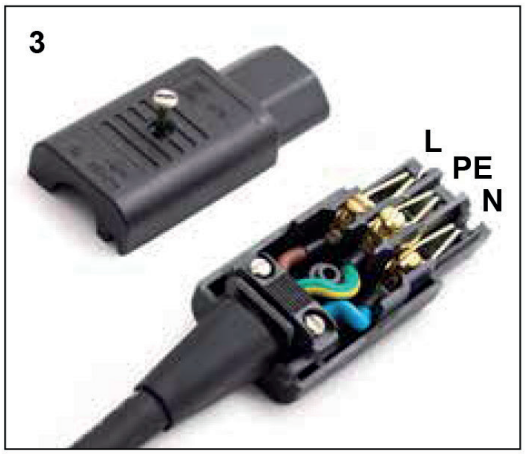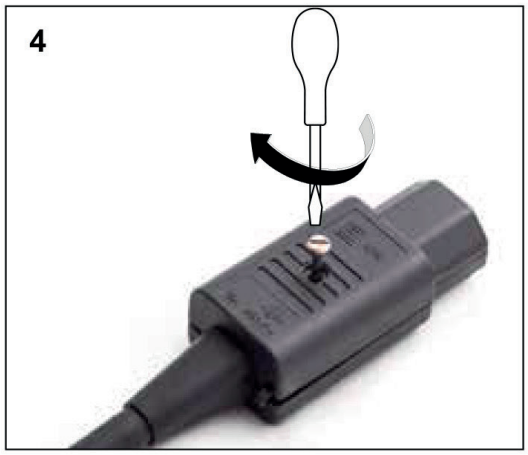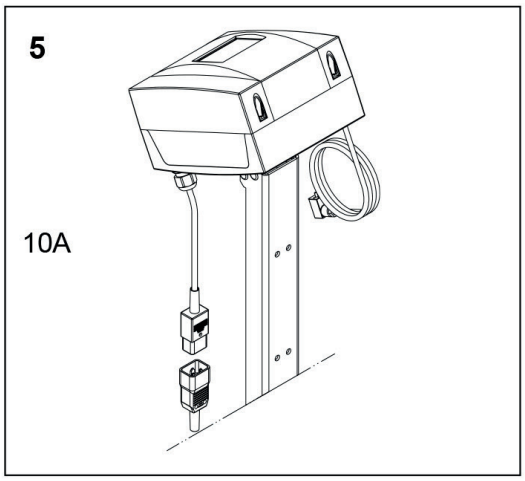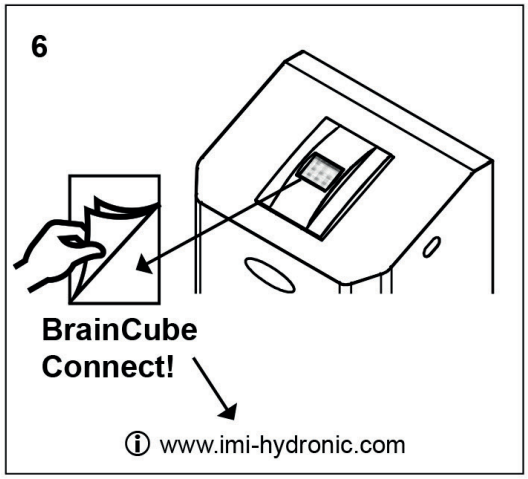
#1-5